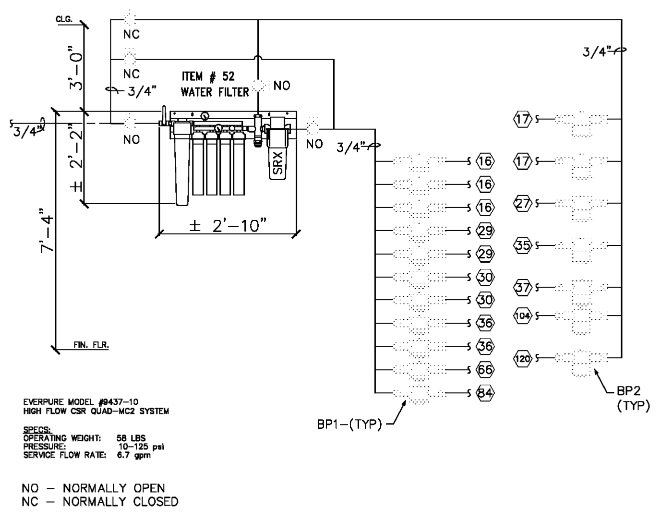

EVERPURE WATER FILTER SYSTEM — 3

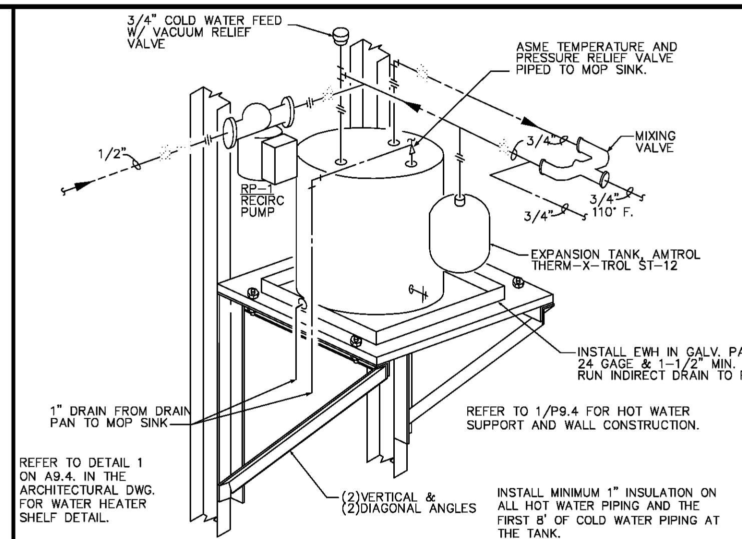

WALL MOUNTED ELECTRIC WATER HEATER — 1

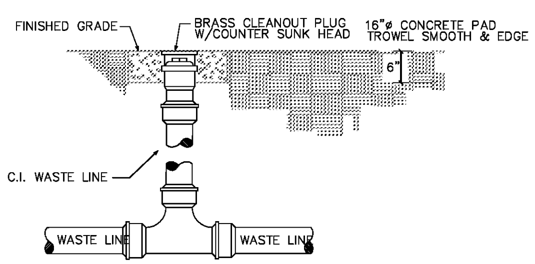

2-WAY CLEANOUT DIAGRAM — 4

PLUMBING FIXTURE SCHEDULE

TAG	DESCRIPTION	MFG.	MODEL	ROUGH-IN SIZE CW	HW	SAN	QUANTITY OF FIXTURES	TRIM	REMARKS
BP1	BACKFLOW PREVENTER	WATTS	SERIES 007	–	–	–	13	BRONZE CONTRUCTION	REDUCED PRESSURE ZONE ASSEMBLY
BP2	BACKFLOW PREVENTER	WATTS	SERIES SS009	–	–	–	5	STAINLESS STEEL CONTRUCTION	REDUCED PRESSURE ZONE ASSEMBLY
EWC	ELECTRIC WATER COOLER	OASIS	PF8ACSL	1/2"	–	1-1/2"	1	SINGLE LEVEL WATER COOLER WITH INTEGRAL WATER FILTER.	CHROME STOPS 1/4 TURN, SUPPLIES INSUL SUPPLIES & TRAP PER ADA
GT-1	INGROUND GREASE TRAP	–	–	–	–	4"	–	H20 RATED W/ TRAFFIC RATED MANHOLE COVERS	SEE SHT. P1.1 FOR DETAIL SEE CIVIL PLANS FOR LOCATION
HB	HOSE BIBB	WOODFORD	B24	1/2"	–	–	2	ANTI-SIPHON VACUUM BREAKER PROTECTED.	RECESSED BOX
HWC	FL MTD, ELONGATED WATER CLOSET, FLUSH VALVE-ADA	AMERICAN STANDARD	2305.100	1"	–	3"	2	VALVE, SLOAN REGAL FLUSHOMETER #111-ADA, OPEN FRONT SEAT OLSONITE #10CC	WATER CONSERVATION 1.6 GALLONS PER FLUSH
HUR	WALL HUNG URINAL - ADA	AMERICAN STANDARD	6501.010	3/4"	–	1-1/2"	1	VALVE, SLOAN REGAL 186-1 FLUSH VALVE. WATER CONSERVATION 1.0 GALLONS PER FLUSH	WALL BRACKET SUPPORT SET AT ELEV. TO MEET ADA
L-1	COUNTERTOP LAVATORY 110 DEG. HOT WATER MAX	AMERICAN STANDARD	0476.028	1/2"	1/2"	1-1/2"	2	AMERICAN STANDARD 6055.202 AUTOMATIC FAUCET W/ FIXED STAINER. .25 GALLONS PER USE	CHROME STOPS 1/4 TURN, SUPPLIES INSUL SUPPLIES & TRAP PER ADA
L-2	SAME AS L-1 ONLY ADA 110 DEG. HOT WATER MAX	AMERICAN STANDARD	0476.028	1/2"	1/2"	1-1/2"	2	AMERICAN STANDARD 6055.202 AUTOMATIC FAUCET WITH FIXED STAINER. .25 GALLONS PER USE.	CHROME STOPS 1/4 TURN, SUPPLIES INSUL SUPPLIES & TRAP PER ADA
RP-1	RECIR. PUMP	TACO	003-BC	–	–	–	–	BRONZE CONTRUCTION	120V/I-PH, 1/40 HP, PROVIDE AQUASTAT W/TIMER
SK	3-COMP SINK BY G.C.	ADVANCE TABCO	FE-3-1812-18RL-X	1/2"	1/2"	2"	1	HARDWARE: KLP53-1014-AF4 ENCORE FAUCET W/ DBN-8000 ENCORE UNIVERSAL ROTARY WASTE OUTLET	PROVIDED BY CIRCLE K, INSTALLED BY GC
FD	FLOOR DRAIN WITH TRAP PRIMER	WADE	1002STD6.1	–	–	2"	3	SATIN STRAINER	
WC	FL MTD, ELONGATED WATER CLOSET, FLUSH VALVE	AMERICAN STANDARD	2234.015	1"	–	3"	1	VALVE, SLOAN REGAL FLUSHOMETER 111, OPEN FRONT SEAT, OLSONITE #10CC	WATER CONSERVATION 1.6 GALLONS PER FLUSH
WH	ELECTRIC WATER HEATER	A.O. SMITH	DEN-52	1-1/2"	1-1/2"	–	–	3/4" P&T RELIEF VALVE	50 GAL, 4.5 KW, 208 VOLT, SINGLE PHASE, 97% THERMAL EFFICIENCY
10	WATER DISPENSER	GLACIER		1/2"	–	1-1/2"			
16	FOUNTAIN DRINK DISPENSER	–		1/2"	–	–	3		
17	FROZEN BEVERAGE	–	–	1/2"	–	–	3		
36	ICE MAKER	SCOTSMAN	N1322R-32	1/2"	–	3/4"	1		
29	COFFEE BREWER	–	–	1/2"	–	–	2		
30	CAPUCCINO MACHINE	–	–	1/2"	–	–	3		
35	F'REAL BLENDER	–	–	1/2"	–	–	1		
103 104 120	VITAMIN WATER / ICED TEA & CRYSTAL LIGHT	–	–	1/2"	–	–	8		(2) VITAMIN WATER, (4) TEA & (2) CRYSTAL LIGHT
59	MOP SERVICE SINK	MUSTEE	63M	3/4"	3/4"	3"	1	AMERICAN STANDARD #8344.111 WALL MOUNT FAUCET TOP BRACE, VACUUM BREAK, STOPS	
96	BUILT-IN HAND SINK	–	–	1/2"	1/2"	1-1/2"	2	FURNISHED & INSTALLED BY VENDOR	
98	FLOOR SINK WITH SQUARE NICKEL BRONZE STRAINER	ZURN	FD2375	–	–	3"	8	PVC FLOOR SINK W/ 1/2 GRATE & SEDIMENT BUCKET	SOLID PLATE COVER WERE NOTED ON P1.1
100	DELETED								
127	1-COMP SINK BY G.C.	KROWNE	HS-2	1/2"	1/2"	1-1/2"	1	17" LONG X 15" BACK 6" DEEP INCLUDES SPLASH MOUNT GOOSE NECK FAUCET	CHROME STOPS 1/4 TURN SUPPLIES AND P-TRAP

(1) - PROVIDE MIXING VALVE TO MEET ADA REQUIREMENTS, EQUAL TO WATTS USG-B, MOUNT UNDER LAV.

(2) - TRAP PRIMER WITH THREADED CONNECTIONS EQUAL TO PRECISION PLUMBING PRODUCTS OREGON #1 PO-500 SINGLE.

(3) - LAVATORY CARRIER CONCEALED ARMS, EQUAL TO WADE 520.

(4) - VERIFY VOLTAGE/PHASE WITH ELECTRICAL CONTRACTOR PRIOR TO ORDERING.

PLUMBING PROJECT NOTES

A. THESE DRAWINGS REFLECT INFORMATION ON EXISTING BUILDING SERVICES GATHERED BY SITE INSPECTIONS, DISCUSSIONS WITH MAINTENANCE PERSONAL, PREVIOUS CONSTRUCTION DOCUMENTS AND INFORMATION PROVIDED BY OTHERS WHO HAVE REPORTED THE AS-BUILT CONDITIONS. THE EXACT LOCATION, ARRANGEMENT, AND SIZE OF PIPELINES, DUCTWORK, AND EQUIPMENT MAY BE DIFFERENT FROM THAT SHOWN ON THESE DRAWINGS. ALL BIDDERS AND THOSE RELYING ON THESE RECORD DOCUMENTS ARE TO OBTAIN INDEPENDENT VERIFICATION OF ITS ACCURACY BEFORE APPLYING IT FOR ANY PURPOSE AND CAUTIONED TO INVESTIGATE EXISTING BUILDING CONDITIONS PRIOR TO SUBMITTING THEIR BIDS TO INSURE THAT THE WORK REPRESENTED ON THE DRAWINGS AND IN THESE SPECIFICATIONS CAN BE INSTALLED AS INDICATED. NOTIFY THE ARCHITECT/ENGINEER OF ANY MAJOR DISCREPANCIES. CONTRACTOR SHALL PERFORM ALL REQUIRED FIELD MEASUREMENTS PRIOR TO FABRICATING PIPING, COMPONENTS, AND DEVICES. FAILURE TO DUE SO SHALL RELIEVE THE ARCHITECT/ENGINEER/OWNER FROM ANY ADDED COST CHANGES. NO EXTRAS WILL BE GIVEN DUE TO UNFAMILIARITY WITH ALL EXISTING CONDITIONS.

B. FURNISH ALL LABOR, MATERIALS, TOOLS, EQUIPMENT, FEES, PERMITS, CERTIFICATE OF INSPECTION, ETC. NECESSARY OR REASONABLE, REQUIRED FOR THE COMPLETE INSTALLATION OF ALL PLUMBING WORK.

C. WORK SHALL COMPLY WITH ALL FEDERAL, STATE, AND LOCAL CODES, LAWS, ACTS, ORDINANCES, REGULATIONS AND REQUIREMENTS OF AUTHORITIES HAVING JURISDICTION.

D. THE COMPLETED INSTALLATION SHALL BE IN ACCORDANCE WITH ALL THE APPLICABLE INDUSTRY STANDARDS OF GOOD PRACTICE, SAFETY, AND THE MANUFACTURERS STRICTEST RECOMMENDATIONS FOR EQUIPMENT AND PRODUCT APPLICATION AND INSTALLATION.

E. THESE DRAWINGS ARE DIAGRAMMATIC ONLY. CONTRACTOR SHALL MAKE MODIFICATIONS INCLUDING OFFSETS, TURNS, AND RE-ROUTING REQUIRED TO COMPLETE THE INSTALLATION. DO NOT SCALE LOCATION OF EQUIPMENT OR PIPING.

F. COORDINATE ALL PLUMBING WORK, INCLUDING EQUIPMENT AND PIPING, WITH OTHER TRADES PRIOR TO WORK.

G. CONTRACTOR TO VERIFY LOCATION OF ALL EXISTING EQUIPMENT SO THAT NO INTERFERENCES ARE ENCOUNTERED WITH OTHER EQUIPMENT OR WITH STRUCTURAL ELEMENTS.

H. ALL PLUMBING WORK IS TO RUN IN A NEAT AND PROFESSIONAL MANNER, WITH THE AESTHETICS OF THE FACILITY OF PARAMOUNT IMPORTANCE. ALL ROUGH-IN WORK TO BE HIDDEN WITHIN WALLS AND ABOVE CEILING UNLESS OTHERWISE NOTED.

I. ALL WORK SHALL BE LOCATED TO AVOID CONFLICTS WITH OTHER TRADES. CLOSELY COORDINATE ALL WORK WITH ALL OTHER TRADES. FAILURE OF THE CONTRACTOR TO COORDINATE WITH ALL OTHER TRADES SHALL RELIEVE THE ARCHITECT/ENGINEER/OWNER FROM ANY ADDED COSTS.

J. THE CONTRACTOR SHALL DO ALL NECESSARY CUTTING OF WALLS AND CEILING. PATCH AROUND ALL OPENINGS TO MATCH EXISTING CONSTRUCTION. NO STRUCTURAL MEMBER SHALL BE CUT WITHOUT PERMISSION FROM THE ENGINEER.

K. THESE DRAWINGS ARE DIAGRAMMATIC ONLY. DO NOT SCALE LOCATIONS OF FIXTURES, EQUIPMENT, LINES, ETC. COORDINATE ALL DOCUMENTS AS TO PROPER LOCATIONS OF ALL EQUIPMENT AND MATERIALS.

L. EXACT LOCATION OF PLUMBING FIXTURES SHALL BE DETERMINED FROM ARCHITECTURAL DRAWINGS.

M. CONTRACTOR SHALL VERIFY INVERT ELEVATIONS OF SEWERS TO WHICH NEW WASTE LINES ARE TO BE CONNECTED BEFORE MAKING UP OR INSTALLATION OF NEW WASTE SYSTEM.

PLUMBING PROJECT NOTES

N. NO PIPING OR EQUIPMENT SHALL BE INSTALLED ABOVE ELECTRICAL EQUIPMENT OR INSTALLED IN ELECTRICAL ROOMS.

O. WASTE AND SOIL PIPING SHALL BE SLOPED AT 1/4" PER FOOT UNLESS OTHERWISE NOTED ON PLANS.

P. DO NOT SUSPEND ANY PIPING, ACCESSORIES, OR ANY OTHER ITEMS FROM 2X JOIST IN PANELIZED ROOF SYSTEM OR THE PLYWOOD ROOF DECK ITSELF. ALL SUPPORTS SHALL CONFORM TO TRUSS MANUFACTURERS RECOMMENDATIONS.

Q. SUBMIT ACCURATE "AS-BUILT" DRAWINGS TO OWNER UPON PROJECT COMPLETION.

R. PROVIDE A READY-TO-USE SYSTEM WITH ALL WORK GUARANTEED IN WRITING AGAINST DEFECTIVE WORKMANSHIP AND MATERIALS FOR A PERIOD OF ONE YEAR MINIMUM FROM OWNER OCCUPANCY UNLESS ARCHITECT SPECIFIES A LONGER WARRANTY TERM.

S. FINISHED SURFACES ARE TO BE PATCHED AND FINISHED TO MATCH EXISTING SURFACES WHEN ROUGH-IN PIPING AND FIXTURES ARE REMOVED AND/OR RELOCATED.

T. AVOID COLUMN AND WALL FOOTING FOUNDATION.

PLUMBING SPECIFICATIONS

SECTION	
15010 BASIC MECHANICAL REQUIREMENTS	1. ALL WORK TO BE DONE AND MATERIALS FURNISHED COMPLYING WITH APPLICABLE LAWS AND REGULATIONS, INCLUDING THE STATE OF ARIZONA MECHANICAL, PLUMBING AND FIRE SAFETY CODES. OBTAIN AND PAY FOR REQUIRED PERMITS AND FEES. 2. ALL MATERIALS USED SHALL BE NEW AND UNDAMAGED. 3. ALL WORK PERFORMED SHALL BE IN ACCORDANCE WITH CURRENT CONSTRUCTION INDUSTRY STANDARDS AND WORKMANSHIP. 4. FURNISH SHOP DRAWINGS TO ARCH/ENGINEER FOR APPROVAL PRIOR TO PLACING DELIVERY ORDERS. PROVIDE SHOP DRAWINGS OF ALL MANUFACTURED EQUIPMENT AND MATERIALS EXCEPT PIPE, PIPE FITTINGS AND GALVANIZED DUCTWORK. 5. FURNISH ACCESS DOORS (RATED OR NON-RATED AS REQUIRED) WHERE VALVES OR EQUIPMENT ARE CONCEALED BEHIND A NON ACCESSIBLE CEILING OR WALL. FURNISH ACCESS DOORS TO GENERAL CONTRACTOR FOR INSTALLATION. 6. FURNISH STEEL PIPE SLEEVES WHERE PIPES PENETRATE RATED WALLS. PROVIDE FIRESTOPPING MATERIALS AND SYSTEM TO MAINTAIN THE REQUIRED RATING OF THE WALL PENETRATED. PROVIDE SHOP DRAWINGS SHOWING LISTING AND RATING OF FIRESTOPPING MATERIALS. 7. ALL MANUFACTURED EQUIPMENT, ACCESSORIES AND MATERIALS SHALL BE USED AS INTENDED BY THE MANUFACTURER IN STRICT ACCORDANCE WITH THE MANUFACTURER'S WRITTEN INSTALLATION, OPERATION AND MAINTENANCE INSTRUCTIONS. 8. CONTRACTOR SHALL PROVIDE IN ADDITION TO ANY OTHER WARRANTIES SPECIFIED, A ONE YEAR FULL LABOR AND MATERIAL WARRANTY ON ALL WORKMANSHIP, MATERIAL AND EQUIPMENT FURNISHED FOR THIS PROJECT. 9. THE PLUMBING CONTRACTOR IS RESPONSIBLE FOR LOCATING ALL OPENINGS AND REQUIRED LINTELS NEEDED FOR THE GENERAL CONTRACTOR FOR THE INSTALLATION OF MECHANICAL EQUIPMENT. 10. SAWCUTS, LINTELS, HEADERS, AND STRUCTURAL MODIFICATIONS TO THE BUILDING STRUCTURE NEEDED FOR THE INSTALLATION OF MECHANICAL EQUIPMENT SHALL BE APPROVED BY THE GENERAL CONTRACTOR, BEFORE INSTALLATION. 11. IN GENERAL, OPENINGS AND REQUIRED LINTELS SHALL BE PROVIDED BY THE GENERAL CONTRACTOR. THE PLUMBING CONTRACTOR IS RESPONSIBLE FOR PROVIDING DETAILS AND TEMPLATES OF ALL OPENINGS NECESSARY FOR MECHANICAL EQUIPMENT INSTALLATION INCLUDING: HOUSING, ACCESS DOORS, INSPECTION DOORS, AND PASSAGEWAYS FOR MECHANICAL EQUIPMENT. THE PLUMBING CONTRACTOR IS RESPONSIBLE FOR SEALING CRACKS AND FINISHING ROUGH EDGES LEFT FOLLOWING MECHANICAL INSTALLATION. 12. APPROVAL EQUALS: PLUMBING ITEMS MANUFACTURED BY A COMPANY OTHER THAN THAT WHICH WAS SPECIFIED IN THE SCHEDULE MAY BE SUBSTITUDED BY APPROVED SHOP DRAWINGS CONTIGENT UPON MEETING THE DESIGN, APPEARANCE, AND FUNCTIONAL STANDARDS ESTABLISHED BY THE ORIGINALLY SPECIFIED ITEM(S). THE PLUMBING CONTRACTOR SHALL BE RESPONSIBLE FOR VERIFYING DIMENSIONS, CLEARANCES, ASSEMBLY, FIT, ETC. OF THE APPROVED EQUAL(S), AND THEIR AFFECT ON OTHER EQUIPMENT FIT AND OPERATION. THE CONTRACTOR IS LIABLE FOR ANY ADDED COSTS TO HIMSELF OR OTHERS CAUSED BY THE APPROVED EQUALS.

PLUMBING SPECIFICATIONS

SECTION	
15100 VALVES	1. BALL VALVES SHALL BE CLASS 125 FOR WATER AND 200 FOR C.A. WITH ENDS AND MATERIALS TO MATCH PIPING SYSTEMS. 2. BALL VALVES 2" AND SMALLER SHALL HAVE BRONZE BODY, STAINLESS STEEL BALL, TEFLON SEATS, AND STUFFING BOX RING, LEVER HANDLE AND BALANCING STOPS, ENDS TO MATCH PIPING SYSTEM.
15140 SUPPORTS & ANCHORS	1. FURNISH PIPE AND DUCT HANGERS, WHERE REQUIRED, FIRMLY SUPPORTED FORM BUILDING STEEL, CONCRETE OR MASONRY STRUCTURE. SUPPORT PIPING SYSTEMES SECURELY WHILE ALLOWING FOR PIPE AND BUILDING EXPANSION AND CONTRACTION. PROVIDE COPPER PLATED HANGERS, FOR COPPER PIPE. USE ADJUSTABLE CLEVIS HANGERS OR ADJUSTABLE STEEL BAND HANGERS. MAXIMUM SPACING SHALL BE 5' FOR 1/2" PIPING, 7' FOR 3/4" TO 1/4" PIPING, 9' FOR 1-1/2" TO 2" PIPING. FURNISH PLUMBING EQUIPMENT SUPPORTS AS DETAILED OR AS REQUIRED TO SAFELY AND PERMANENTLY CARRY THE WEIGHT OF THE EQUIPMENT.
15250 PLUMBING INSULATION	1. INSULATE ABOVE FLOOR WATER PIPING WITH ELASTOMERIC PLACTIC PERFORMED PIPE INSULATION WITHOUT JACKETING. ALL INSULATING MATERIALS TO HAVE FLAME SPREAD RATING OF 25 OR LESS AND SMOKE DEVELOPMENT RATING OF 50 OR LESS AS TESTED BY ANSI/ASTM E 84 (NFPA 233) METHOD. INSULATE ALL PIPING WITH SURFACE TEMPERATURES BELOW 75 DEGREE F WITH 1/2" INSULATION. INSULATE ALL PIPING WITH SURFACE TEMPERATURES 75 DEGREES F AND HIGHER WITH 1" THICK INSULATION. INSTALL MINIMUM 1" INSULATION ON ALL HOT WATER PIPING AND THE FIRST 8' OF COLD WATER PIPING AT THE TANK. JOINTS IN INSULATION SHALL BE GLUED, NOT TAPED. WHERE PIPES ARE EXPOSED AND LESS THAN 8' ABOVE FLOOR, PROVIDE HEAVY DUTY METAL JACKETING OVER INSULATION. INSULATE ABOVE FLOOR HORIZONTAL STORM PIPING WITH 1" FIBERGLASS PERFORMED PIPE INSULATION WITH FACTORY APPLIED ALL PURPOSE COVER.
15411 WATER DISTRIBUTION SYSTEM	1. WATER MAIN COMING INTO BUILDING SHALL BE TYPE K COPPER UP TO VALVE, AND ALL STOPS COMING OUT OF WALL SHALL BE COPPER. 2. ABOVE GRADE, WATER PIPING SHALL BE SCH 40 PVC FOR COLD WATER PIPE, AND SCH 80 CPVC FOR HOT WATER PIPE, ASTM D1784. 3. BELOW GRADE: WATER PIPING SHALL BE TYPE K COPPER WITH WROUGHT COPPER SOLDER-JOINT FITTINGS. PROVIDE DIELECTRIC UNIONS AT ALL PIPE MATERIAL CHANGES. THOROUGHLY FLUSH AND CLEAN ALL NEW AND EXISTING WATER PIPING SYSTEMS. TEST ALL PIPING SYSTEMS PER REGULATIONS IN ITEM NO.1 OR AT 225 PSI FOR A MINIMUM OF 2 HOURS WITH NO PRESSURE DROP INDICATED PRIOR TO INSULATING. 4. STERILIZE ALL DOMESTIC WATER PIPING PRE REQUIREMENTS OF LOCAL HEALTH DEPARTMENT.
15420 DRAINAGE & VENT SYSTEMS	1. WITHIN BUILDING, SCHEDULE 40 PVC, DWV TYPE PIPE AND SOLVENT WELDED PIPE FITTINGS, SCHEDULE 30 PVC PIPE MAY BE USED FOR VENT PIPING WHERE PERMITTED BY CODE. HORIZONTAL PIPE SHALL BE SUPPORTED BY ADJUSTABLE RING HANGERS EQUAL TO ITT-GRINNEL FIG. 97. VERTICAL PIPING SHALL BE SUPPORTED AT EACH FLOOR OR ATTIC LEVEL BY RISER.
15440 PLUMBING FIXTURES	1. PROVIDE AIR CHAMBERS AT EACH FIXTURE CONNECTION. AIR CHAMBERS SHALL BE ONE SIZE LARGER THAN SUPPLY PIPE AND SHALL BE 12" LONG. WHERE REQUIRED BY PLUMBING CODE, FURNISH AND INSTALL MANUFACTURED WATER HAMMER ARRESTORS. 2. PLUMBING FIXTURES SHALL BE INSTALLED WHERE SHOWN ON THE ARCHITECTURAL DRAWINGS. INSTALL FIXTURES LEVEL AND PLUMB. FURNISH TRAPS WHERE REQUIRED. FIXTURES SHALL BE EASILY REMOVABLE FOR SERVICE AND CLEANING. 3. PROVIDE CHROME PLATED RIGID OR FLEXIBLE SUPPLIES TO FIXTURES WITH STOP VALVES, CHROME PLATED 17 GAUGE BRASS TRAPS WITH CHROME PLATED ESCUTCHEONS. 4. SEAL ALL FIXTURES TO WALL AND FLOOR USING SILICONE SEALANT. MATCH SEALANT COLOR TO FIXTURE COLOR. 5. FIXTURES DESIGNATED BARRIER FREE SHALL BE INSTALLED IN COMPLIANCE WITH AMERICAN'S WITH DISABILITIES ACT. 6. ALL CLEANOUT COVERS TO BE STAINLESS STEEL.

CLIENT:

CIRCLE K STORES, INC.

12911 N. TELECOM PKWY
TAMPA, FLORIDA 33637
PHONE: 813-910-6800
FAX 813-910-6912

DESIGN TEAM:

MDM SERVICES, INC.

engineering • environmental • construction
1055 KATHLEEN ROAD, LAKELAND, FLORIDA 33805
(863) 646-9130

EB #004857

NO.	DATE	REVISION DESCRIPTION

SOUMYA CHAKRABARTI, MS, P.E.
FLA. REG # 66380

5339 SQ. FT. CMU BUILDING A.K.A. 4968

SITE DESIGNATIONS:

CIRCLE K #1885
5750 SE FEDERAL HWY
STUART, MARTIN COUNTY FL

SCALE: AS NOTED	MDM JOB # 17137
DATE: 08-11-2017	
DESIGNED BY:	
DRAWN BY: P. DOSS	FILE NAME:
CHECKED BY:	

DRAWING TITLE:

PLUMBING - SPECIFICATIONS

SHEET NO:

P1.3

Order Plans @ www.LDILine.com