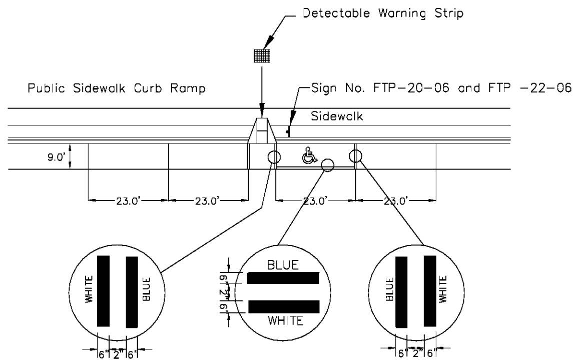


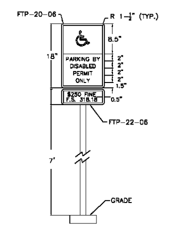


**NOTES**

1) ALL LETTERS TO BE 1" SERIES "C", BLACK AND SHALL CONFORM TO FDOT "ROADWAY AND TRAFFIC DESIGN STANDARDS". (LATEST EDITION)
2) TOP PORTION OF SIGN TO HAVE REFLECTORIZED (ENGINEERING GRADE) BLUE BACKGROUND WITH WHITE REFLECTORIZED LEGEND AND BORDER.
3) BOTTOM PORTION OF SIGN SHALL HAVE A REFLECTORIZED (ENGINEERING GRADE) WHITE BACKGROUND WITH BLACK OPAQUE LEGEND BORDER.
4) ONE SIGN REQUIRED FOR EACH PARKING SPACE.
5) HEIGHT OF SIGN BOTTOM SHALL BE 7' ABOVE GROUND IN ACCORDANCE WITH FDOT "ROADWAY AND TRAFFIC DESIGN STANDARDS" (LATEST EDITION).

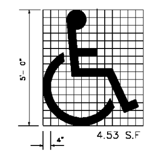


Use of pavement in accessible parking spaces is optional, when used the symbol shall be 3' or 5' high and white in color.

**"UNIVERSAL SYMBOL OF ACCESSIBILITY"**
N.T.S.

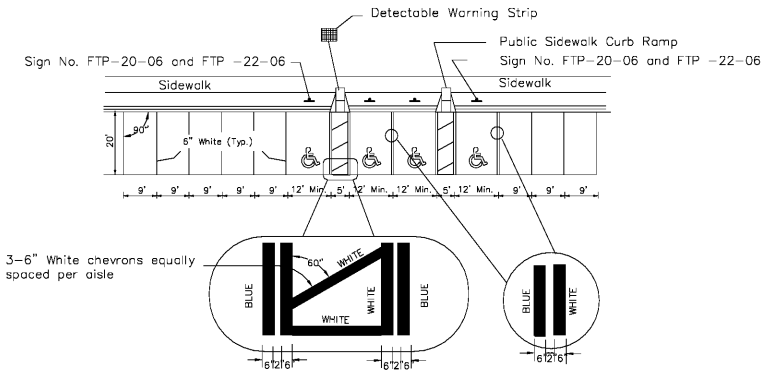


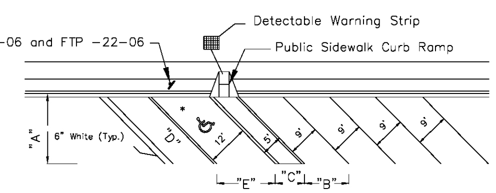


● FOR ACCESSIBLE MARKING-SEE ABOVE

| | DIMENSIONS | | | | |
|---|---|---|---|---|---|
| ANGLE | "A" | "B" | "C" | "D" | "E" |
| 45° | 20'-0" | 12'-9" | 7'-1" | 28'-3" | 17'-0" |
| 60° | 21'-0" | 10'-5" | 5'-9" | 24'-3" | 13'-10" |

NOTES:

1. Dimensions are to the centerline of markings.
2. An access aisle is required for each accessible space when angle parking is used.
3. Critera for pavement markings only, not public sidewalk curb ramp locations. For ramp locations refer to plans.
4. Blue pavement markings shall be tinted to match shade 15180 of Federal Standards 595a.
5. The FTP-22-06 panel shall be mounted below the FTP-20-06 sign.

**PAVEMENT MARKING FOR PUBLIC SIDEWALK CURB RAMPS (PER FDOT INDEX NO. 17346)**
N.T.S.

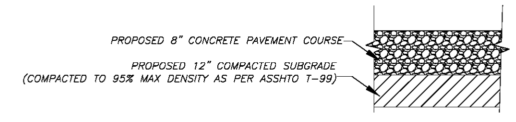


*ROADWAY PAVEMENT STRUCTURE*

*PAVEMENT COURSE*
*8" CONCRETE (4000 PSI)*

*SUBGRADE*
*12" COMPACTED SUBGRADE*

**DRIVE ASILE CONCRETE PAVEMENT DETAIL**
N.T.S.

*NOTE:*
*SEE ARCHITECT PLANS FOR REINFORCING DETAILS*

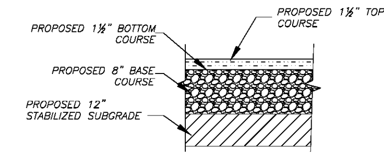


*ROADWAY PAVEMENT STRUCTURE*

| | |
|---|---|
| *TOP COURSE* | |
| *1½" TYPE SP-9.5* | 0.66 |
| *BOTTOM COURSE* | |
| *1½" TYPE SP-12.5* | 0.66 |
| *BASE COURSE* | |
| *8" LIMEROCK (LBR 100)* | 1.44 |
| *SUBGRADE* | |
| *12" STABILIZED SUBGRADE (LBR 40)* | 0.96 |
| | *SN = 3.72* |

**DRIVE ASILE DETAIL**
N.T.S.

*NOTE:*
*ASPHALT PAVING SHALL BE COMPLETED IN (2) LIFTS. THE TOP LIFT SHALL INSTALLED AT FINAL COMPLETION OF PROJECT.*

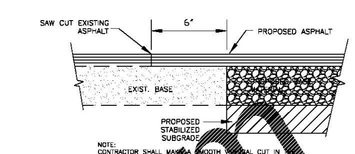


NOTE:
CONTRACTOR SHALL MAKE A SMOOTH VERTICAL CUT IN EXISTING PAVEMENT AT A DISTANCE NOT LESS THAN 6" FROM THE EXISTING EDGE. THE EXISTING BASE SHALL BE EXPOSED AND CLEANED TO REMOVE LOOSE PARTICLES. THE EXPOSED LIMEROCK SHALL THEN BE PRIMED NOT MORE THAN THREE DAYS PRIOR TO SCHEDULED PAVING.

**PROPOSED PAVEMENT ABUTMENT DETAIL**
N.T.S.

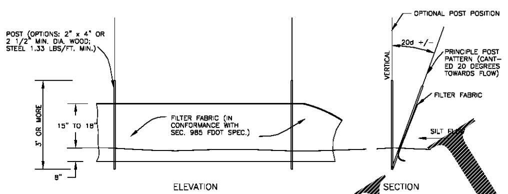


TYPE III SILT FENCE

**SILT SCREEN BARRIER DETAILS**
N.T.S.

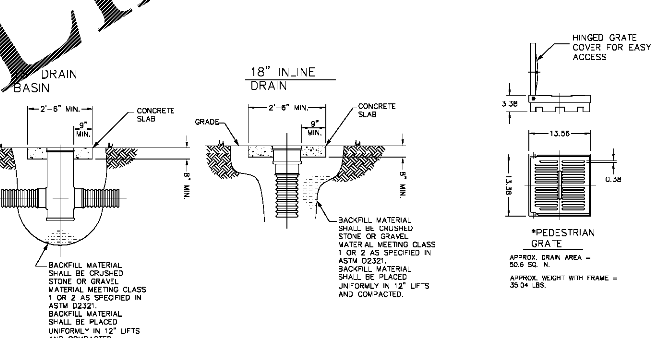


APPROX. DRAIN AREA = 50.6 SQ. IN.

APPROX. WEIGHT WITH FRAME = 35.04 LBS.

**18" YARD DRAIN**
N.T.S.

STANDARD GRATE HAS H-25 HEAVY DUTY RATING
SOLID COVER HAS H-25 HEAVY DUTY RATING
PEDESTRIAN GRATE HAS H-10 MEDIUM DUTY RATING
QUALITY: MATERIALS SHALL CONFORM TO ASTM A536 GRADE 70-50-05
MATERIAL: DUCTILE IRON
PAINT: CASTINGS ARE FURNISHED WITH A BLACK PAINT

* SIZE OF OPENING MEETS REQUIREMENTS OF AMERICAN DISABILITY ACT AS STATED IN FEDERAL REGISTER PART III, DEPARTMENT OF JUSTICE, 28 CFR PART 36. NONDISCRIMINATION ON THE BASIS OF DISABILITY BY PUBLIC ACCOMMODATIONS AND IN COMMERCIAL FACILITIES; FINAL RULE.

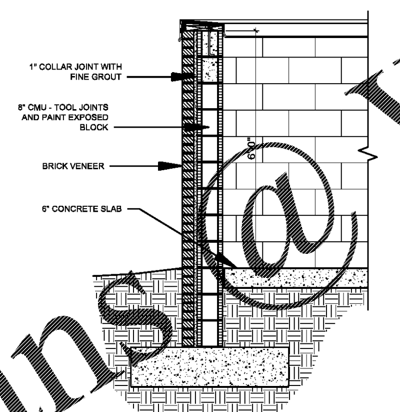


NOTES:
SEE ARCHITECTURAL PLANS FOR ADDITIONAL DETAILS.

**DUMPSTER ENCLOSURE WALL SECTION**
N.T.S.

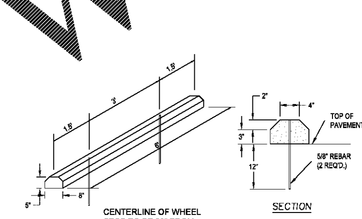


**CONCRETE WHEEL STOP DETAIL**
N.T.S.

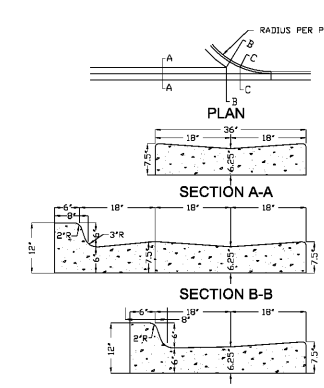


**VALLEY GUTTER PER FDOT INDEX NO. 300**
N.T.S.

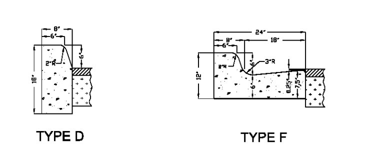


USE 3/4" RADIUS FOR ALL NON-LABELED RADII

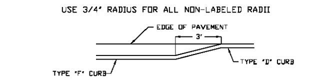


**CURB TRANSITION**

NOTES:
-SEE F.D.O.T. INDEX NO. 300 FOR ADDITIONAL DETAILS.
-A 1/2" EXPANSION JOINT IS REQUIRED BETWEEN CONCRETE PAVEMENT AND CURBS AND/OR GUTTERS.
-MINUMUM 3,000 psi. FIBERMESH CONCRETE TO BE USED FOR CURBS AND/OR GUTTERS.

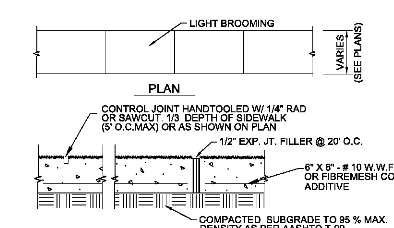


NOTES :
1. ALL CONTROL JOINTS SHALL BE HAND TOOLED OR SAW CUT.
2. CONCRETE SHALL BE 3,000 PSI, 4" THICK (MIN)
3. A MAXIMUM CROSS SLOPE OF 2.0% .
4. CONTROL JOINTS 5' O.C. MAX (OR AS SHOWN)
5. EXPANSION JOINTS 20' O.C. MAX (1/2" WIDE EXPANSION JOINT MATERIAL W/ 1/4" REVEAL AND SEALANT)

**CONCRETE SIDEWALK DETAIL**
N.T.S.

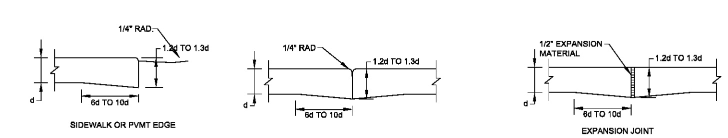


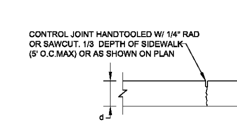


CONSTRUCTION (BUTT) JOINTS SHALL BE USED WHENEVER PLACEMENT OF CONCRETE IS STOPPED FOR MORE THAN 30 MINUTES.

THICKEN EDGE AS SHOWN WHEN d IS GREATER THAN 4-INCHES.

SLABS WILL REQUIRE KEYWAY OR DOWELS TO MAINTAIN ALIGNMENT AT BUTT JOINTS. SEE TYPICAL SECTION.

CONSTRUCTION JOINT

JOINT SPACING

CURBS:
EXPANSION JOINTS ABUTTING SIDEWALKS, STRUCTURES, RETURNS, RAMPS AND AT MAX 50' INTERVALS UNLESS APPROVED OTHERWISE BY ENGINEER & LOCAL ROAD AUTHORITY.

CONTROL JOINTS SHALL MATCH ADJACENT SIDEWALK, OR AT MAX 10' INTERVALS.

SIDEWALKS:
EXPANSIONS JOINTS ABUTTING CURBS, STRUCTURES, CHANGES IN CROSS-SECTION, OR ALIGNED WITH ADJACENT SURFACES, OR AT MAX 30' INTERVAL.

CONTROL JOINTS SHALL MATCH ADJACENT FEATURES OR INTERVAL SHALL BE MAX OF 5 FEET.

**CONCRETE JOINT DETAILS**
N.T.S.

Order Plans @ WWW.LDILine.com

COASTAL DESIGN CONSULTANTS

FleischmanGarcia
ARCHITECTURE · PLANNING · INTERIOR DESIGN
SAFETY HARBOR OFFICE, 195 FOURTH AVENUE NORTH, SAFETY HARBOR, FLORIDA 34695, PHONE (727) 725-8880, FAX (727) 725-3900
TAMPA OFFICE, 324 HYDE PARK AVENUE, SUITE 300, TAMPA, FLORIDA 33606, PHONE (813) 251-4400, FAX (813) 251-1994
SARASOTA OFFICE, 5967 CATTLEMEN LANE, SUITE 6, SARASOTA, FLORIDA 34232, PHONE (941) 342-9293, FAX (941) 342-9253
REGISTRATION NUMBER AA C000123

**Pasco County**
**Fire & Rescue Station**
**No. 17**
New Port Richey, Florida

THIS DESIGN AND DRAWING IS THE SOLE PROPERTY OF FLEISCHMANGARCIA. NO PART OF THIS WORK MAY BE REPRODUCED WITHOUT PRIOR WRITTEN PERMISSION FROM FLEISCHMANGARCIA.

I CERTIFY TO THE BEST OF MY KNOWLEDGE THAT THESE DRAWINGS COMPLY W/ ALL RELEVANT BUILDING CODES

| | |
|---|---|
| FGA PROJECT NUMBER | 19039 |
| ISSUE DATE | 05-25-20 |
| | CIVIL DETAILS |
| SHEET NUMBER | C7.0 |